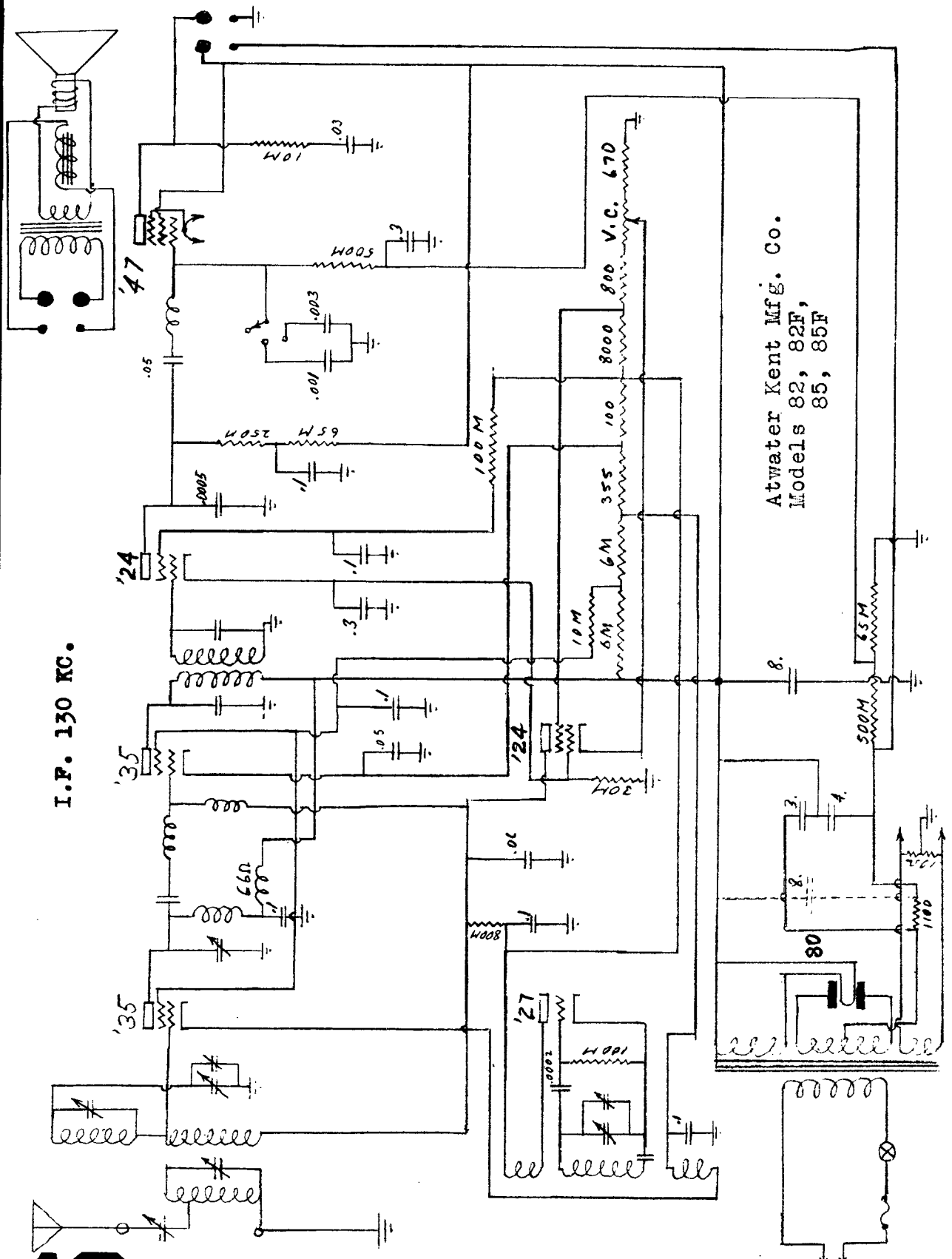
Atwater Kent Mfg. Co.
Models 82, 82F,
85, 85F
I.F. 130 KC.
'47
'24
'35
'35
'24
'27
80
V.C. 670
800
8000
100
355
6M
10M
6M
100M
65M
500M
1100
H01
H005
H052
H59
H008
H001
U99
.03
.05
.003
.001
.0005
.1
.3
.01
.0002
8.
4.